SWELL

903860FGT-NDD

SWELL 60" FAN

DETAILS	
FAN FINISH:	Graphite
BLADE COUNT:	3
SLOPE DEGREE:	20

DIMENSIONS	
WIDTH:	60"
HEIGHT:	13.8"

LIGHT SOURCE	
VOLTAGE:	120v

MOUNTING	
CANOPY:	6" Dia.
LEAD WIRE:	1 x 76"

SHIPPING	
CARTON LENGTH:	34.1
CARTON WIDTH:	12.6
CARTON HEIGHT:	11.4

Swell is sophisticated and distinct in design without sacrificing on its purpose. Available in Matte Black with Walnut blades or Graphite with Driftwood blades, Swell sets the tone for all contemporary spaces. Swell is DAMP rated, making it perfect for both interior and outdoor settings.

PRODUCT DETAILS:

- This item includes a 6" down rod. Other various lengths of down rods are available and sold separately to customize the installation height.
- Suitable for use in damp locations as defined by NEC and CEC. Meets United States UL Underwriters Laboratories & CSA Canadian Standards Association Product Safety Standards.
- This item may be hung on a sloped ceiling
- For more information on how to control your ceiling fan via the Hinkley Home Automation App, click here.
- Powered by a highly efficient and quiet DC motor
- Fan Control included, HIRO Control - 6 Speed Reversing
- WiFi compatible with included fan control
- Motor carries a lifetime warranty

SWELL 60" FAN

903860FGT-NDD

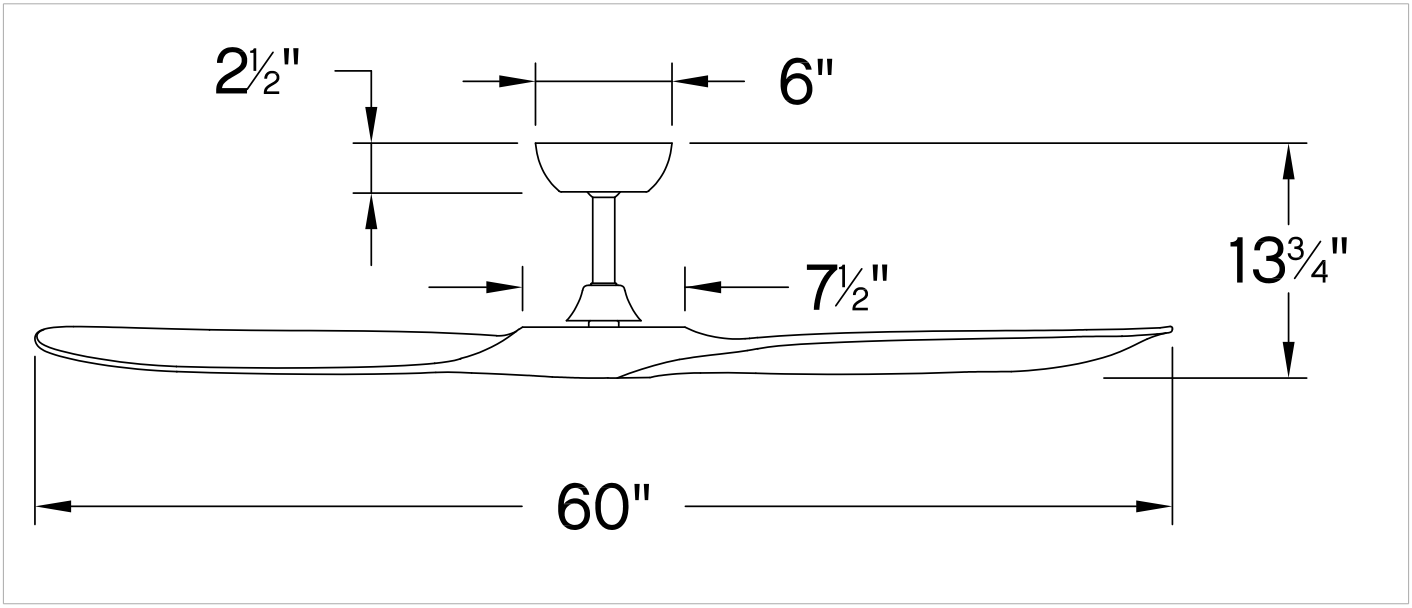

PERFORMANCE SPECIFICATIONS	STANDARD	
	HIGH SPEED	AVERAGE SPEED
Airflow	8521	6059
EnergyUse	30.5	19
EnergyCost	9	5
Efficiency	279	325
AMPS	0.47	0.28
RPMS	155	106

AVERAGE PERFORMANCE AND ENERGY INFORMATION

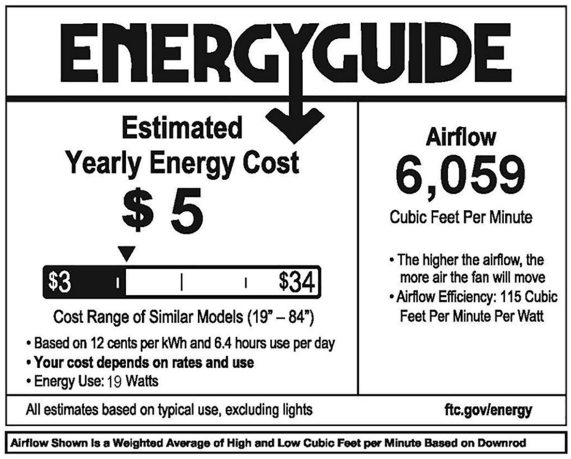

HINKLEY

HINKLEY
33000 Pin Oak Parkway
Avon Lake, OH 44012

PHONE: (440) 653-5500
Toll Free: 1 (800) 446-5539

hinkley.com