GLADIATOR

900460FCW-NID

GLADIATOR 60" FAN

DETAILS	
FAN FINISH:	Chalk White
BLADE COUNT:	5
SLOPE DEGREE:	22

DIMENSIONS	
WIDTH:	60"
HEIGHT:	16"

LIGHT SOURCE	
VOLTAGE:	120v

MOUNTING	
CANOPY:	6" Dia.
LEAD WIRE:	1 X 76"

SHIPPING	
CARTON LENGTH:	29.5
CARTON WIDTH:	17
CARTON HEIGHT:	11

With the greatest combination of power, versatility and technology, Gladiator has it all. Its DC motor technology delivers excellent energy efficiency, and is available in all of Hinkley's best finishes with reversible blades, maximizing design choices for almost any interior space. Blades are included with every fan.

PRODUCT DETAILS:

- This item includes a 4.5" down rod. Other various lengths of down rods are available and sold separately to customize the installation height.
- Suitable for use in dry (indoor) locations as defined by NEC and CEC. Meets United States UL Underwriters Laboratories & CSA Canadian Standards Association Product Safety Standards.
- This item may be hung on a sloped ceiling
- For more information on how to control your ceiling fan via the Hinkley Home Automation App, click here.
- Pull chain manual reverse, accessory controls available
- Reversible blades included
- Motor carries a lifetime warranty
- Blades, controls, switches, capacitors and hardware carry a 1-year warranty

HINKLEY
33000 Pin Oak Parkway
Avon Lake, OH 44012

PHONE: (440) 653-5500
Toll Free: 1 (800) 446-5539

hinkley.com

GLADIATOR 60" FAN

900460FCW-NID

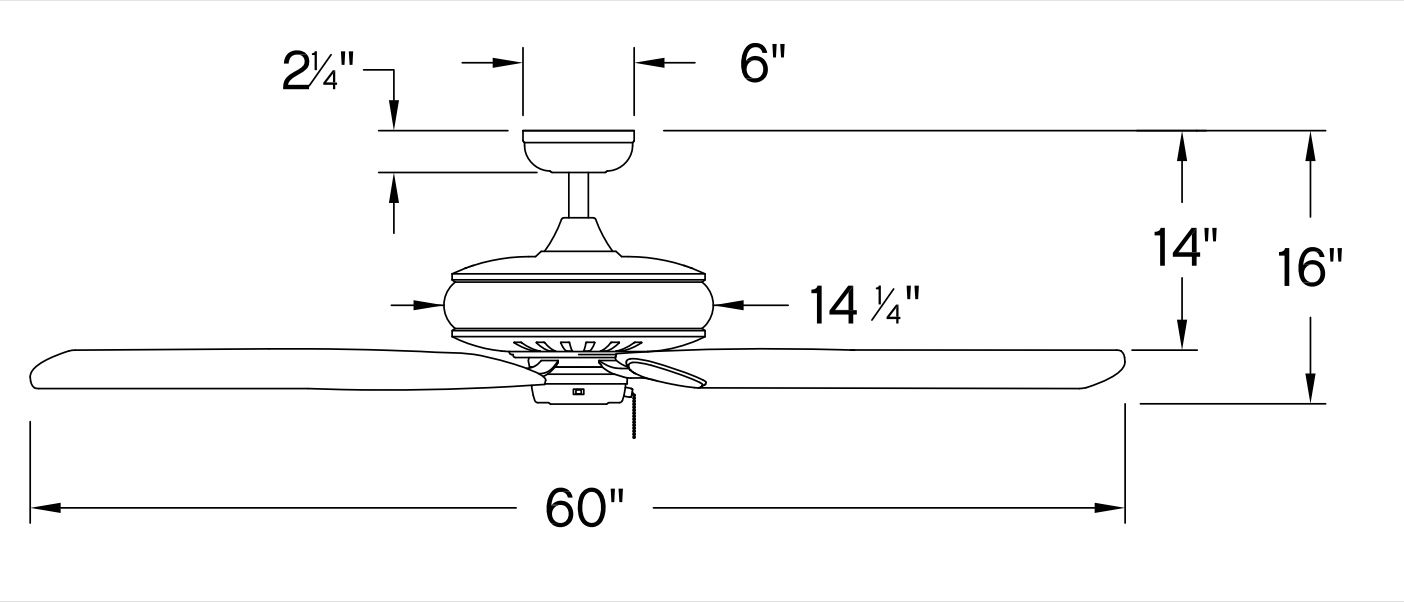

PERFORMANCE SPECIFICATIONS	STANDARD	
	HIGH SPEED	AVERAGE SPEED
Airflow	6254	4670
EnergyUse	31.2	20
EnergyCost	9	6
Efficiency	200	231
AMPS	0.41	0.25
RPMS	116	86

AVERAGE PERFORMANCE AND ENERGY INFORMATION

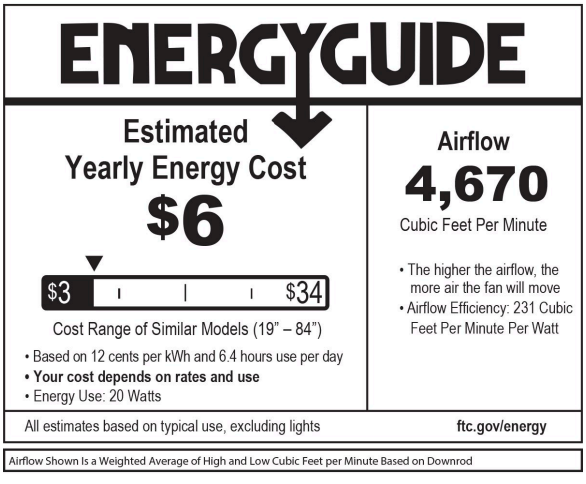

HINKLEY

HINKLEY
33000 Pin Oak Parkway
Avon Lake, OH 44012

PHONE: (440) 653-5500
Toll Free: 1 (800) 446-5539

hinkley.com