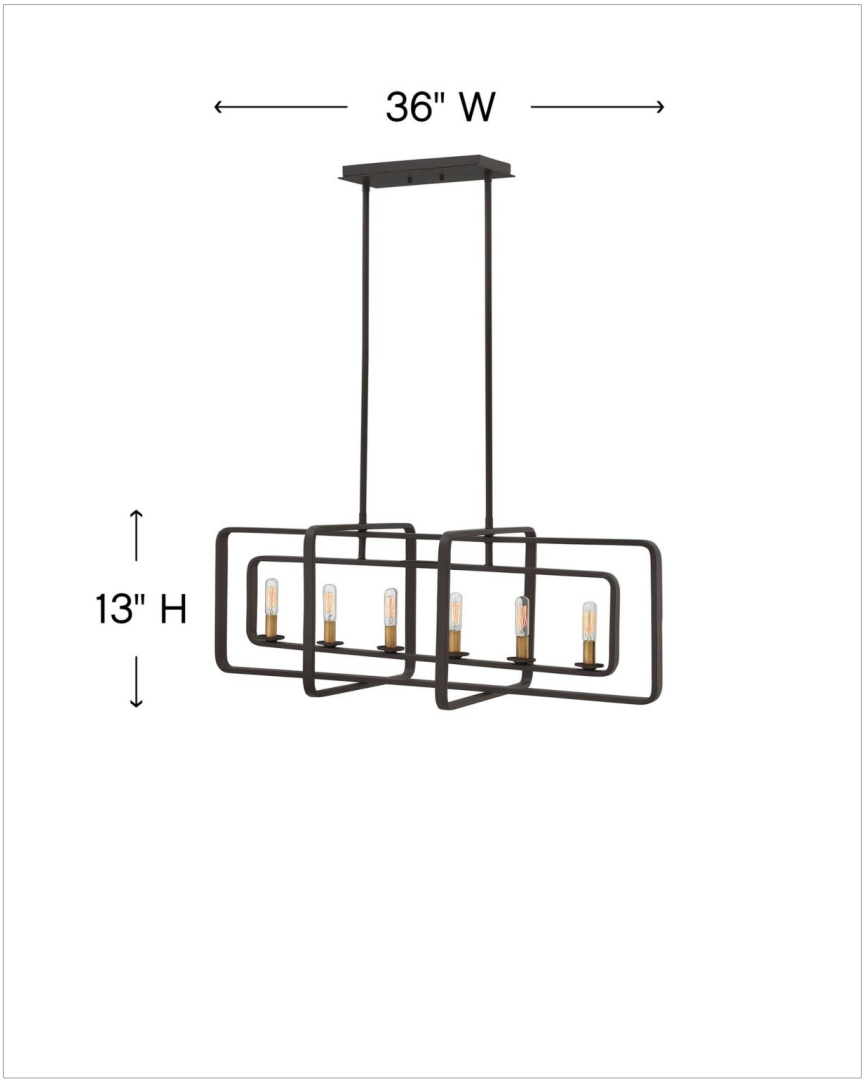

QUENTIN

4815KZ

SIX LIGHT LINEAR

Quentin is constructed of angular forms that create a striking geometric interplay. This stem-hung collection features intersecting rectangles in a bold Buckeye Bronze finish, forming a modern silhouette. Candle sleeves in Heritage Brass add a distinctively vintage feel that is both hip and historical.

DETAILS	
FINISH:	Buckeye Bronze
MATERIAL:	Steel
DIMMABLE:	YES, WITH DIMMABLE LAMP (NOT INCLUDED)

DIMENSIONS	
WIDTH:	36"
HEIGHT:	13"
DEPTH:	16
WEIGHT:	13lb

LIGHT SOURCE	
LIGHT SOURCE:	Socketed
WATTAGE:	6-5w Cand. LED, 60w Equiv.
VOLTAGE:	120v

MOUNTING	
CANOPY:	5"W X 11.75"L
LEAD WIRE:	1 X 120"
MAX HEIGHT:	46

SHIPPING	
CARTON LENGTH:	39
CARTON WIDTH:	9
CARTON HEIGHT:	16
CARTON WEIGHT:	19.8

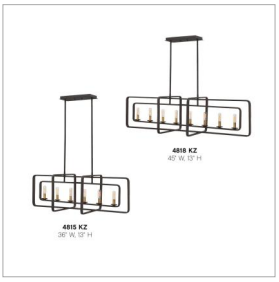

PRODUCT DETAILS:

- This fixture includes multiple down stems in various lengths to customize the installation height, including two 6" stems and four 12" stems
- Suitable for use in dry (indoor) locations as defined by NEC and CEC. Meets United States UL Underwriters Laboratories & CSA Canadian Standards Association Product Safety Standards.
- Ideal for vintage filament bulbs (not included)
- Angular lines, a bold finish, simple shape and sturdy details merge for a robust but pared down industrial design

HINKLEY

HINKLEY
33000 Pin Oak Parkway
Avon Lake, OH 44012

PHONE: (440) 653-5500
Toll Free: 1 (800) 446-5539

hinkley.com