SAWYER

902928FMW-LWD

SAWYER 36" WITH 28" LED SMART FANDELIER

DETAILS	
FAN FINISH:	Matte White
GLASS:	Clear Seedy
BLADE COUNT:	5
SLOPE DEGREE:	20

DIMENSIONS	
WIDTH:	36"
HEIGHT:	20"

LIGHT SOURCE	
VOLTAGE:	120v

MOUNTING	
CANOPY:	6" Dia.
LEAD WIRE:	1 X 76"

SHIPPING	
CARTON LENGTH:	39.7
CARTON WIDTH:	39.6
CARTON HEIGHT:	10.5

The fresh, rustic design of Sawyer will inject any outdoor living experience with the warm, cozy ambiance of an indoor setting. Available in Metallic Matte Bronze with Sequoi, Matte White with Weathered Wood or Matte Black with Driftwood, Sawyer features composite blades. Sawyer is so versatile, it can be used for both indoor and outdoor spaces.

PRODUCT DETAILS:

- This item includes one 12" and one 24" down rod. Other various lengths of down rods are available and sold separately to customize the installation height.
- Suitable for use in wet (interior direct splash and outdoor direct rain or sprinkler) locations as defined by NEC and CEC. Meets United States UL Underwriters Laboratories.
- This item may be hung on a sloped ceiling
- Meets California Energy Commission Title regulations/JA8 when using the included LED bulb
- For more information on how to control your ceiling fan via the Hinkley Home Automation App, click here.
- Fan Control included, HIRO Control - 6 Speed Reversing
- WiFi compatible with included fan control
- LED bulbs carry a 3-year limited warranty

SAWYER 36" WITH 28" LED SMART FANDELIER

902928FMW-LWD

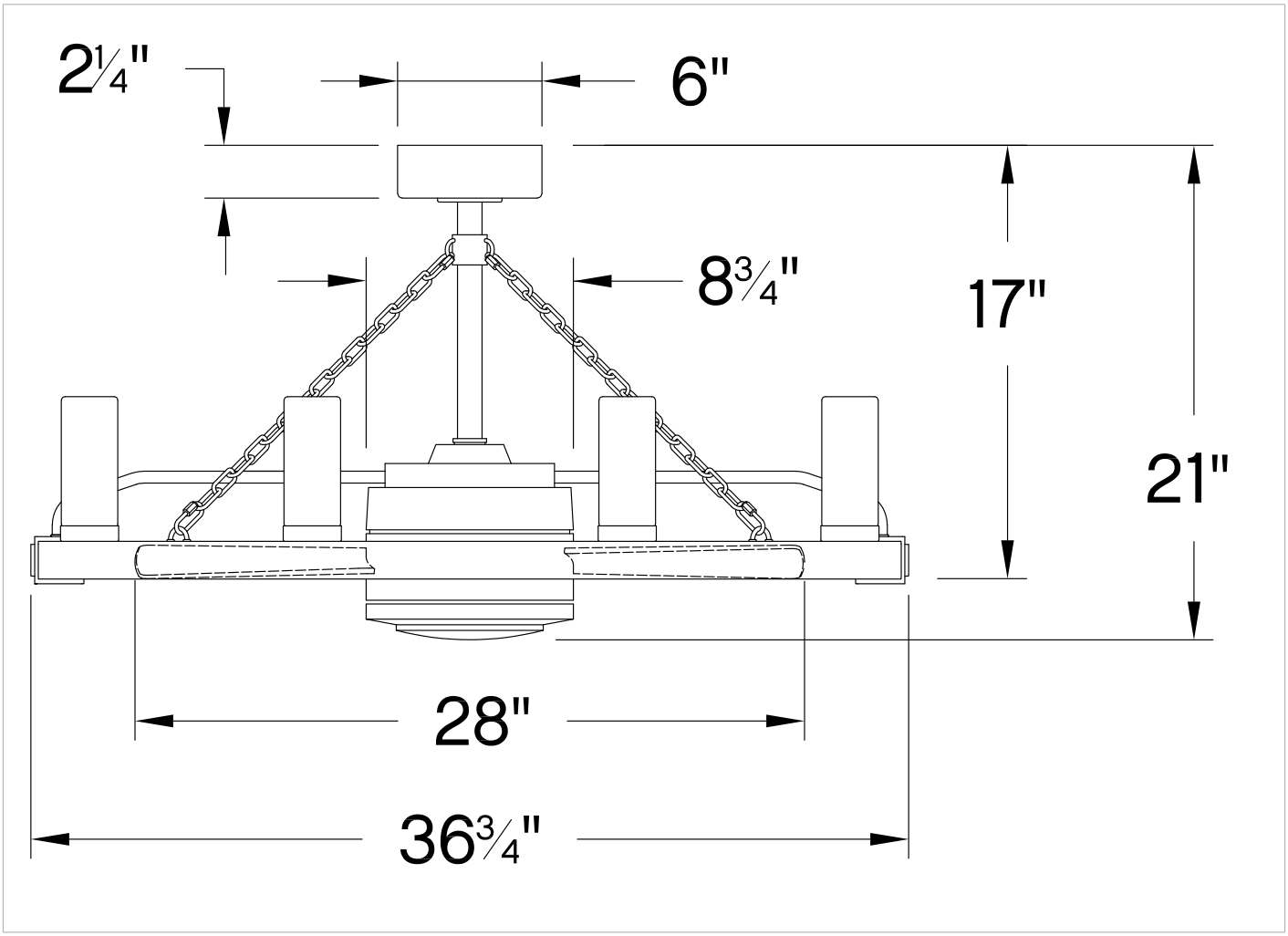

PERFORMANCE SPECIFICATIONS	STANDARD	
	HIGH SPEED	AVERAGE SPEED
Airflow	2432	1637
EnergyUse	10.7	8
EnergyCost	3	2
Efficiency	227	201
AMPS	0.19	0.12
RPMS	319	211

AVERAGE PERFORMANCE AND ENERGY INFORMATION

HINKLEY

HINKLEY
33000 Pin Oak Parkway
Avon Lake, OH 44012

PHONE: (440) 653-5500
Toll Free: 1 (800) 446-5539

hinkley.com

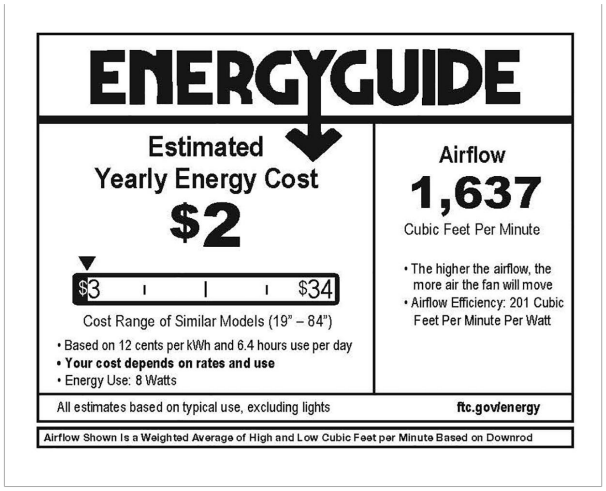
ENERGYGUIDE
Estimated
Yearly Energy Cost
$2
$3
$34
Cost Range of Similar Models (19" – 84")
• Based on 12 cents per kWh and 6.4 hours use per day
• Your cost depends on rates and use
• Energy Use: 8 Watts
Airflow
1,637
Cubic Feet Per Minute
• The higher the airflow, the more air the fan will move
• Airflow Efficiency: 201 Cubic Feet Per Minute Per Watt
All estimates based on typical use, excluding lights
ftc.gov/energy
Airflow Shown Is a Weighted Average of High and Low Cubic Feet per Minute Based on Downrod