# CABANA

**901836FAW-NWA**

CABANA 36" FAN

| DETAILS | |
|---|---|
| FAN FINISH: | Appliance White |
| BLADE COUNT: | 5 |
| SLOPE DEGREE: | 35 |

| DIMENSIONS | |
|---|---|
| WIDTH: | 36" |
| HEIGHT: | 12.5" |

| LIGHT SOURCE | |
|---|---|
| VOLTAGE: | 120v |

| MOUNTING | |
|---|---|
| CANOPY: | 6" Dia. |
| LEAD WIRE: | 1 X 76" |

| SHIPPING | |
|---|---|
| CARTON LENGTH: | 17.1 |
| CARTON WIDTH: | 9.7 |
| CARTON HEIGHT: | 9.2 |

Part of the Regency Series, the traditional Cabana is a seamless way to enhance the comfort level and enjoyment of any room. Available in Appliance White, Metallic Matte Bronze, Matte Black and Brushed Nickel finish options, it complements spaces of all styles. Cabana achieves powerful air movement and is so versatile it can be used both indoors and outdoors. Blades are included with every fan.

**PRODUCT DETAILS:**

- This item includes a 4.5" down rod. Other various lengths of down rods are available and sold separately to customize the installation height.
- Suitable for use in wet (interior direct splash and outdoor direct rain or sprinkler) locations as defined by NEC and CEC. Meets United States UL Underwriters Laboratories.
- This item may be hung on a sloped ceiling
- For more information on how to control your ceiling fan via the Hinkley Home Automation App, click here.
- Pull chain manual reverse, accessory controls available
- Add an optional light kit to customize the functionality of the fan
- The Regency Series features a range of traditional ceiling fans designed to enhance a wide variety of spaces with ease.
- Fan mounts directly to canopy or with an included downrod for dual mount capability

# CABANA 36" FAN

901836FAW-NWA

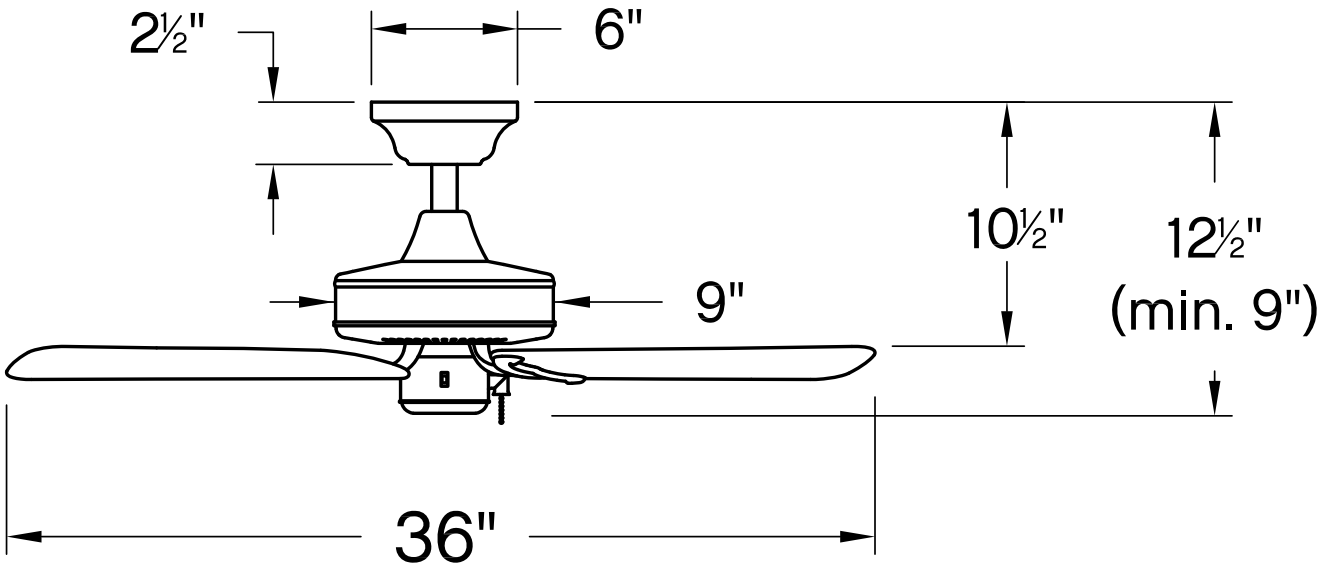


| PERFORMANCE SPECIFICATIONS | STANDARD | | DUAL MOUNT | |
|---|---|---|---|---|
| | HIGH SPEED | AVERAGE SPEED | HIGH SPEED | AVERAGE SPEED |
| Airflow | 3101 | 2566 | 2947 | 2947 |
| EnergyUse | 37.6 | 26.8 | 37.7 | 26.4 |
| EnergyCost | 11 | 8 | 11 | 7 |
| Efficiency | 82 | 96 | 78 | 92 |
| AMPS | 0.32 | 0.26 | 0.32 | 0.26 |
| RPMS | 242 | 193 | 242 | 193 |

**AVERAGE PERFORMANCE AND ENERGY INFORMATION**

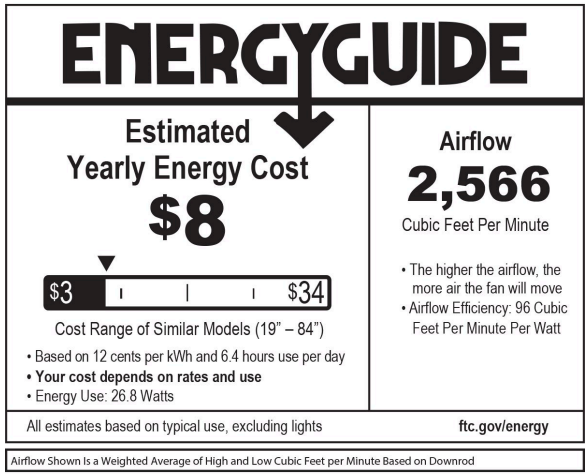



HINKLEY

**HINKLEY**
33000 Pin Oak Parkway
Avon Lake, OH 44012

**PHONE: (440) 653-5500**
Toll Free: 1 (800) 446-5539

**hinkley.com**